MS Insulated Screw Driver

Nominal voltages up to 36 kV / 15 ... 60 Hz

REFILLING EQUIPMENT

Based on DIN VDE 0681 Part 1

- Not for use in wet weather
- For indoor and outdoor installations
- For loosening and tightening cable end locking screws under live conditions
- With interchangeable operating heads (straight and angled)

Loosening the locking screw using the MS insulated screw driver.

Application

The insulated screw driver with interchangeable operating heads (straight and angled) allows for the connection of special bits and locking screws that are used to open and close cable ends under live conditions. Only tested bits (screw blade inserts) and special locking screws may be used.

Requirements

MS insulated screw drivers allow maintenance work to be done under supervision of a qualified electrician at voltages up to 1 to 36 kV according to EN 50110-1 "Operation of electrical installations – Minimum Requirements", observing clauses 6.3.1 to 6.3.12. In Germany apply sections BGV A3 and BGR A3 of the national accident prevention regulations (UVV) "Elektrische Anlagen und Betriebsmittel" [Electrical installations and equipment] issued by the German Employer's Liability Association for Precision and Electrical Engineering (BGFE).

Technical Data	
Insulating rod	Glass-fibre reinforced polyester tube, Ø30 mm, grey
Handle	Plastic, black
Operating head	PVC, Ø30 mm, for attaching special bits and locking screws

Apart from the insulated screw driver kit, the plastic case allows for transport of the insulated refilling lance incl. filling hose and special locking screws. These elements, however, are not included in delivery.

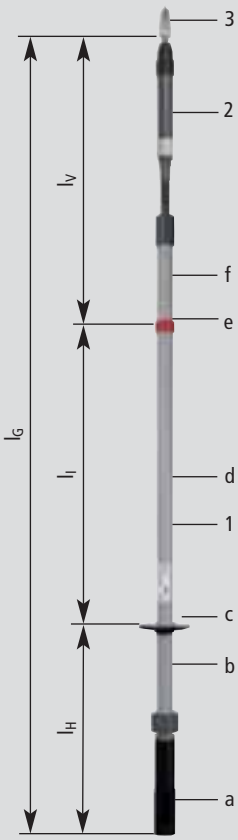

Design

1 Operating rod with
- a adjustable handle
- b handle
- c handguard
- d insulating part
- e red ring
- f extension

2 Operating head straight (30°) or angled (70°)

3 Special bit

Dimensions:

l_H Length of handle = 385 mm

l_I Length of insulating part = 525 mm

l_V Length of extension = 430 mm

l_G Total length = 1375 mm

www.dehn.de

DELTEC®

MS Insulated Screw Driver

REFILLING EQUIPMENT

Type	Model	Part No.

A Screw Driver Kit

Pos.	Qty.	Type	Description	Part No.
1	1	BS 1125 SD KEV MS	Operating rod with adjustable handle	785 266
2	1	VL 350 SD KEV MS	Extension	785 273
3	1	AK SD KEV MS	Operating head, straight	785 267
4	1	AK SD W30 KEV MS	Operating head, angled (30°)	785 268
5	1	AK SD W70 KEV MS	Operating head, angled (70°)	785 269
6	1	BIT 13 SD KEV MS	Special bit 13 mm	785 271
7	1	BIT 8 SD KEV MS	Special bit 8 mm	785 272
8	1	KKL SDS KEV MS	Plastic case	785 298

SDS KEV MS	Contents and plastic case included	**785 265**

Further extensions for the insulating part, operating heads and special bits are available on request.

Single Parts of MS Insulated Screw Driver

DELTEC®

REFILLING EQUIPMENT

8

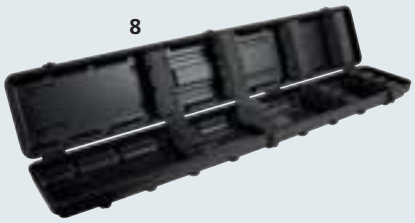

Plastic Case, empty

With foam padding

Type	Colour	Dimensions	Part No.
KKL SDS KEV MS	●	1270 x 215 x 140 mm	**785 298**

1

Operating Rod with Adjustable Handle

With plug-in coupling for extension handle, handguard, insulating part, red ring and extension

Type	Diameter	Dimensions	Position	Part No.
BS 1125 SD KEV MS	30 mm	1135 mm	1	**785 266**

2

Extension

For operating rod

Type	Diameter	Dimensions	Position	Part No.
VL 350 SD KEV MS	30 mm	350 mm	2	**785 273**

3

Operating Head, straight

With hexagon terminal for attaching special bits and special locking screws

Type	Diameter	Dimensions	Position	Part No.
AK SD KEV MS	30 mm	310 mm	3	**785 267**

4

Operating Head, angled (30°)

With hexagon terminal for attaching special bits and special locking screws

Type	Diameter	Dimensions	Position	Part No.
AK SD W30 KEV MS	30 mm	270 mm	4	**785 268**

5

Operating Head, angled (70°)

With hexagon terminal for attaching special bits and special locking screws

Type	Diameter	Dimensions	Position	Part No.
AK SD W70 KEV MS	30 mm	300 mm	5	**785 269**

6

Special Bit 13 mm

With safety plug-in system, for use with operating heads type AK SD ...

Type	Diameter	Dimensions	Position	Part No.
BIT 13 SD KEV MS	25 mm	50 mm	6	**785 271**

7

Special Bit 8 mm

With safety plug-in system, for use with operating heads type AK SD ...

Type	Diameter	Dimensions	Position	Part No.
BIT 8 SD KEV MS	25 mm	50 mm	7	**785 272**

DELTEC®

Special Locking Screws

REFILLING EQUIPMENT

Nominal voltages up to 36 kV

Screwing a special locking screw into the cable end using an angled operating head.

- Not for use in wet weather
- For indoor and outdoor installations
- For sealing cable ends
- For use with operating heads type AK SD ...
- With safety plug-in system
- UV-resistant

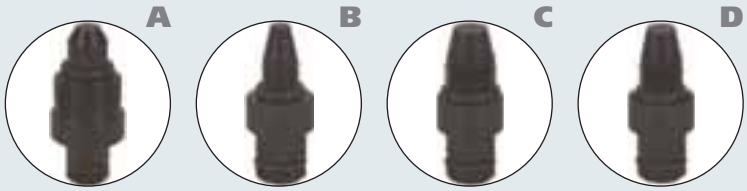

Type	Dimensions	PU	Part No.
A Special Locking Screw from F&G For cable ends			
VS F&G M22 F	M22 x 55 mm	12 pc(s).	**785 281**
B Special Locking Screw from Köttgen For cable ends			
VS KOET M10	M10 x 45 mm	12 pc(s).	**785 282**
C Special Locking Screw from Raychem For cable ends			
VS RAY M14	M14 x 45 mm	12 pc(s).	**785 283**
D Special Locking Screw from GOW For cable ends			
VS GOW M12	M12 x 45 mm	12 pc(s).	**785 284**

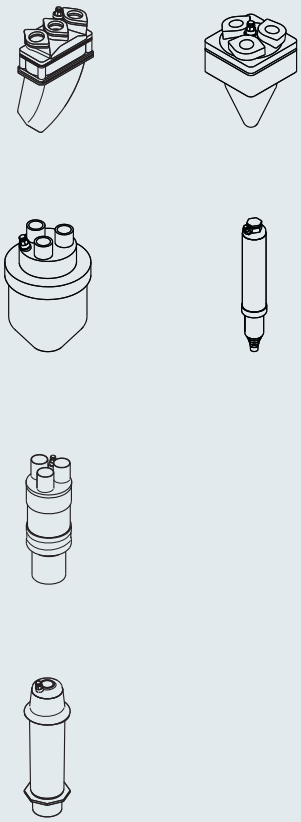

Special locking screws for cable ends from other manufacturers are available on request.